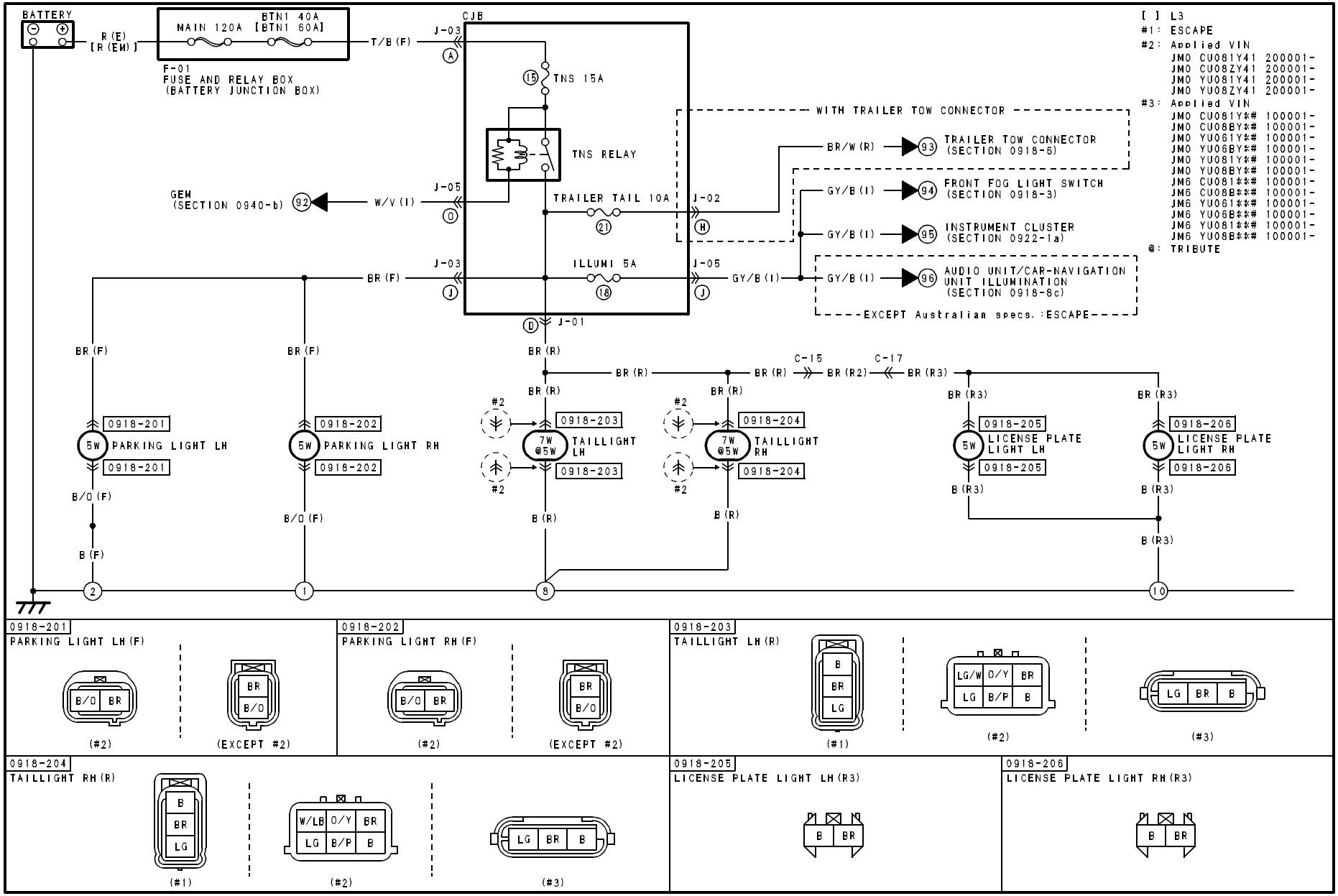LICENSE PLATE LIGHT/PARKING LIGHT/TAILLIGHT